New Eagle™
MECHATRONIC CONTROL SOLUTIONS

DIESEL-ELECTRIC HYBRID APPLICATIONS

SUMMARY

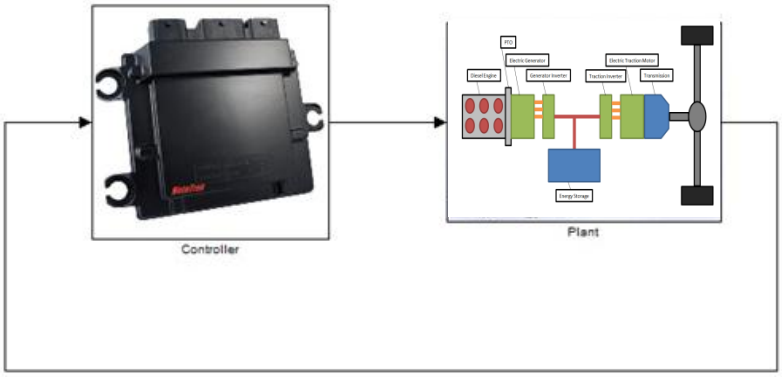

Contact Information:

New Eagle
3588 Plymouth Road, #274
Ann Arbor, MI 48105-2603
Phone: (734) 649-8156

Date: 19 June 2012

CONTENTS

3588 Plymouth Road, Box #274
Ann Arbor, MI 48105-2603
Phone 877.234.14102

INTRODUCTION

The need for a rapid transition towards electrification in today's transportation industry is clear, but the experience and knowledge required to transform these new ideas to reality are scarce. Until a definitive pathway to a fossil-fuels free future is created, a number of technological as well as economic hurdles continue to be a part of automotive industry's day to day business. Overcoming these hurdles requires a collaboration of skills from a wide range of engineering disciplines and therefore, New Eagle continues to grow the hybrid and electric vehicles team. New Eagle's expertise lies in the integration of the powertrain components, vehicle electronics, energy-storage and powertrain controls. With the right supplier relationships, development tools and engineering team, New Eagle has developed a pathway for rapid and robust diesel-electric hybrid power plant integration.

3588 Plymouth Road, Box #274
Ann Arbor, MI 48105-2603
Phone 877.234.14103

HYBRID ELECTRIC ARCHITECTURE

POWERTRAIN COMPONENTS

The Diesel-Electric Hybrid system illustrated in Figure 1 contains the following powertrain components:

- Diesel Engine – Efficient diesel engine tuned to operate at optimum fuel economy during electrical generation
- PTO – optional PTO for speed matching efficiency
- Electric Generator – Electric motor tuned to operate at optimum efficiency during electrical generation
- Generator Inverter – Efficient inverter for electrical transmission to energy storage and traction inverter
- Energy Storage – battery or capacitor bank sized for application needs
- Traction Inverter – Efficient inverter for electrical transmission to traction motor
- Electric Traction Motor – Electric motor sized to provide appropriate torque for application
- Transmission – Efficient geared mechanical transmission, manual or automatic

The powertrain components for the diesel-electric hybrid system must be appropriately sized and specified for the torque and energy required for the required duty cycle. New Eagle has experience in performing system analysis and specifying all of the above powertrain components.

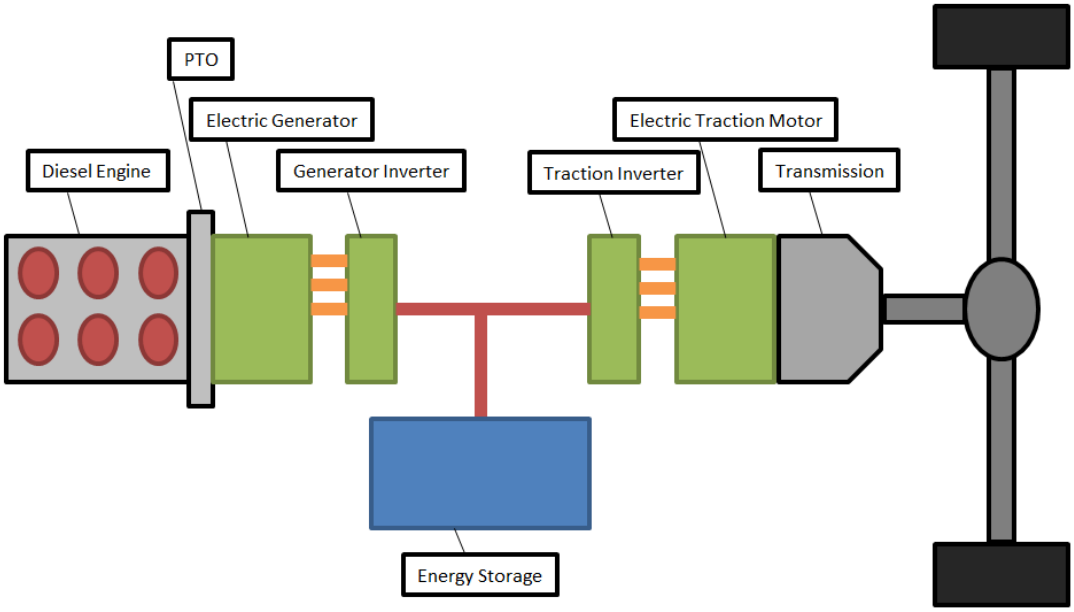

Figure 1: Typical Diesel-Electric Hybrid System

Figure 1 illustrates a typical diesel-electric series hybrid system. In addition to the mechanical and electrical powertrain components there is a CAN based controller network that handles the processing of the torque and energy management controls as illustrated in Figure 2.

3588 Plymouth Road, Box #274
Ann Arbor, MI 48105-2603
Phone 877.234.14104

CONTROLS NETWORK

The Diesel-Electric Hybrid system controls network illustrated in Figure 2 consists of the following elements:

- ECM – Engine Control Module, supplied by engine manufacturer or New Eagle
- BMS – Batter Management System, supplied by battery supplier or New Eagle
- HSC – Hybrid System Controller, master system controller supplied by New Eagle
- MC – Motor Controller, supplied by inverter supplier
- TCM – Transmission Control Module, supplied by transmission manufacturer or New Eagle (automatic only)

As with the powertrain components, the controllers must be appropriately sized and specified and placed in the appropriate network location. New Eagle has significant expertise in the development of vehicle controls networks from both a hardware and software perspective.

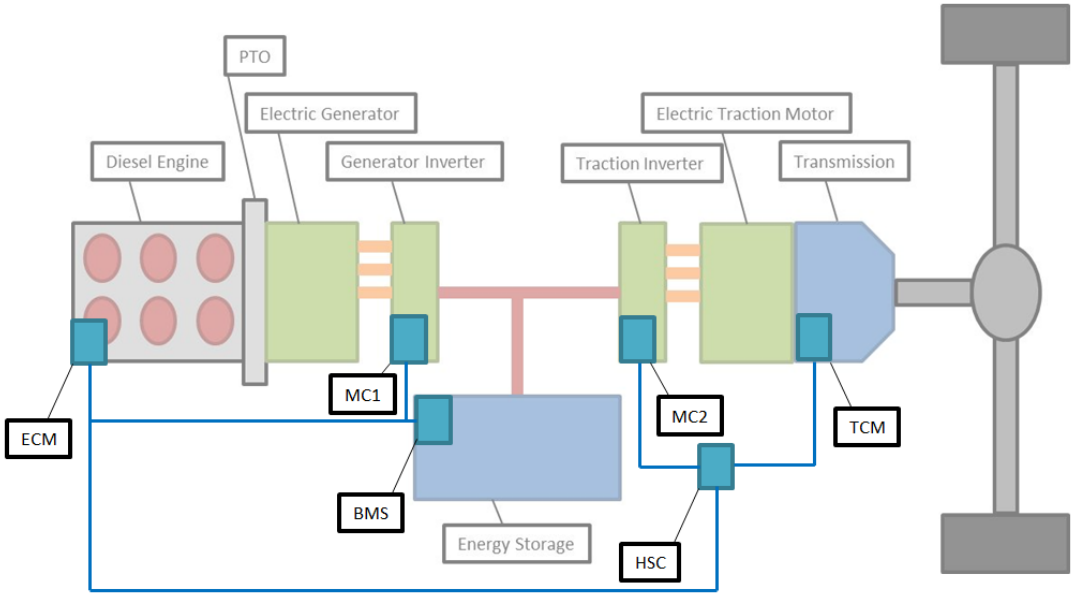

Figure 2 Diesel-Electric Hybrid System Controls Layer

3588 Plymouth Road, Box #274
Ann Arbor, MI 48105-2603
Phone 877.234.14105

NEW EAGLE DIESEL-ELECTRIC HYBRID PRODUCTS AND SERVICES

New Eagle offers Diesel-Electric Hybrid components and integration and can supply controls through every stage of development, from concept to production. Using its network of component suppliers and years of experience developing hybrid electric vehicle control algorithms, New Eagle can develop different Diesel-Electric Hybrid systems to cover a wide variety of applications. Examples Diesel-Electric Hybrid systems are offered below and represent just two of the many possible hybrid combinations that New Eagle can provide. Note that these diagrams are intended to show system architecture and are not representative of mechanical packaging, routing, or implementation.

3588 Plymouth Road, Box #274
Ann Arbor, MI 48105-2603
Phone 877.234.14106

HYBRID ARCHITECTURE EXAMPLES

DIESEL-ELECTRIC PARALLEL THRU THE ROAD HYBRID COACH

The example illustrated in Figure 3 shows a coach bus with a parallel road coupled diesel-electric hybrid system. The appeal to this system stems from the inherent rear dual-axle design, allowing for four wheel propulsion. The architecture leverages the dual torque paths to allow for optimum sizing of traction components.

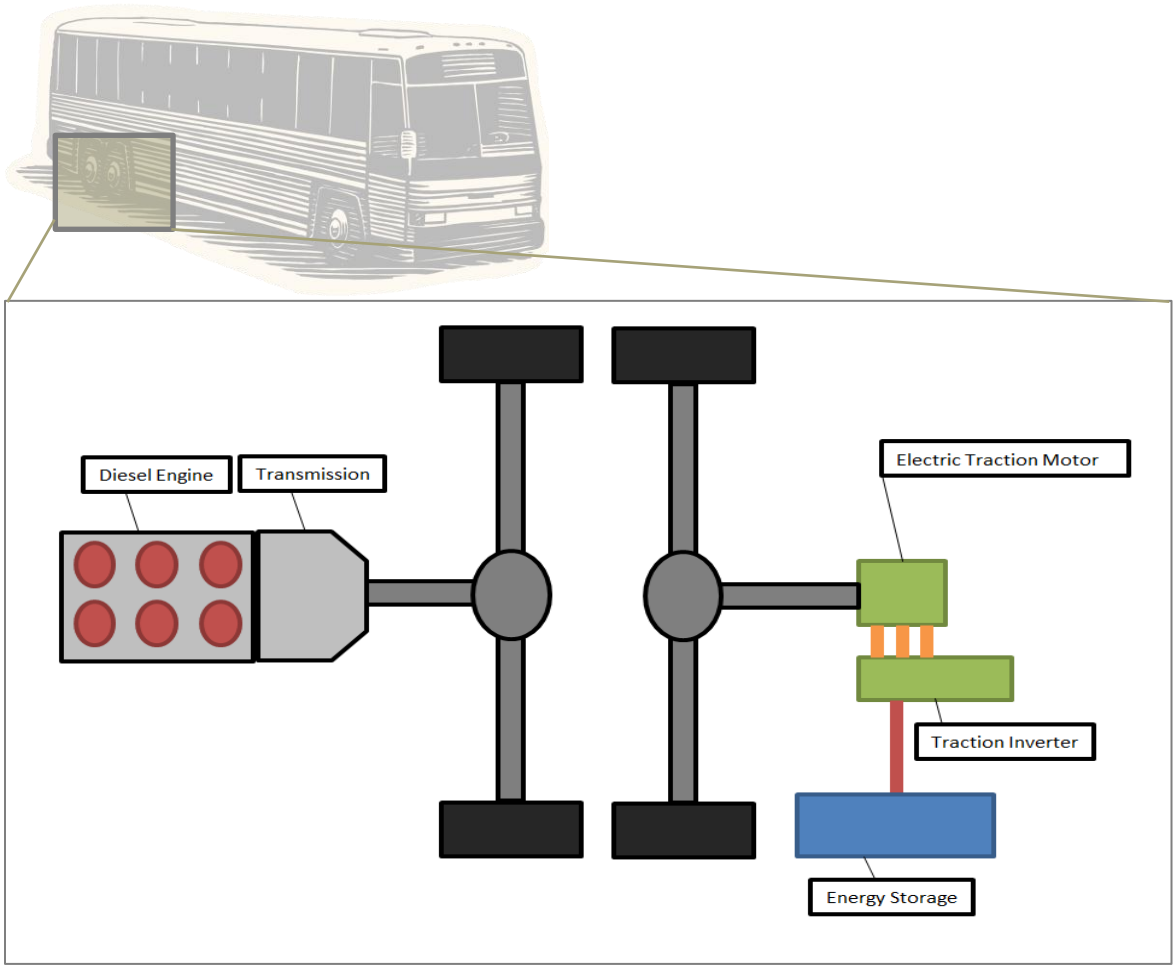

Figure 3 Parallel Road Coupled Diesel-Electric Hybrid System

System Benefits

- Regenerative braking captures otherwise lost energy
- Start/Stop operation reduces idle fuel consumption
- Electric load shifting allows for increased diesel engine operating efficiency
- Dual torque paths allow for smaller sized diesel and electric traction systems
- Optimum architecture for overall drivetrain efficiency

DIESEL-ELECTRIC PLUG-IN SERIES HYBRID CITY BUS

The example illustrated in Figure 4 shows a city bus with a plug-in series diesel-electric hybrid system. The series architecture offers the simplicity of a single torque path while enabling the diesel engine to operate at its most efficient points. The plug-in system allows for increased fuel savings through the use of energy stored from the grid.

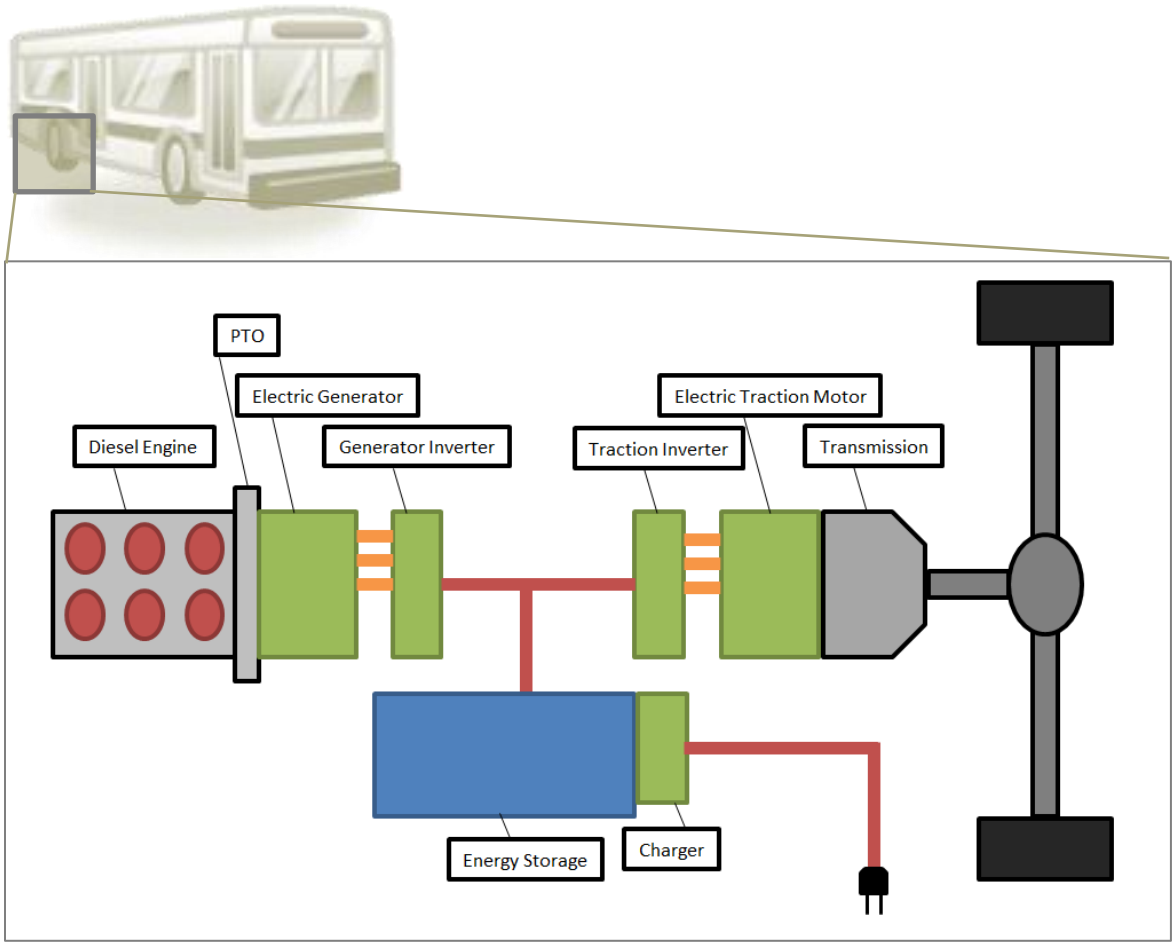

Figure 4 Plug-in Series Diesel-Electric Hybrid System

System Benefits

- Regenerative braking captures otherwise lost energy
- Start/Stop operation reduces idle fuel consumption
- Continuous high efficiency operating point on diesel-generator system
- Traction system sized for full operating torque, offering electric-only mode
- Single torque machine offers straight-forward torque management
- Plug-in energy storage system significantly reduces fuel consumption on short routes

3588 Plymouth Road, Box #274
Ann Arbor, MI 48105-2603
Phone 877.234.14108