PART NO. EFP139-00

ITEM			PART NUMBER	DESCRIPTION	QTY	
1			4-8002	BEARING NYLINER	1	
2			82249200	HOUSING	1	
3			82280400	PEDAL ARM	1	C
4			82249500	COMPRESSION LIMITER	3	
5			82284900	RETAINING RING	1	A
6			82249700	INNER SPRING	1	
7			82249800	OUTER SPRING	1	
8			82252500	BLANKING PLUG	1	
9			82252700	SCREW - PLASTITE PT	2	
10			82259500	MAGNET CARRIER	1	
11			E161-00	SENSOR	1	
12			4-8010	BEARING	1	B

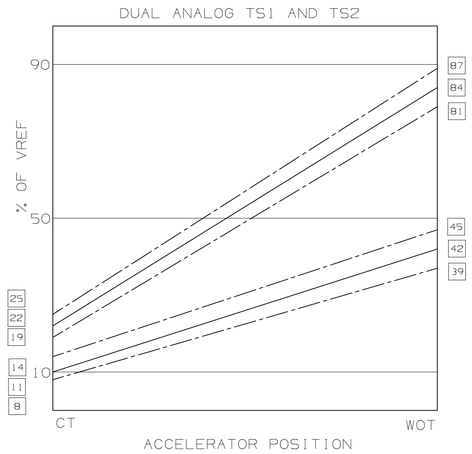

IDENTIFICATION:
LABEL 54020158, MARK AS FOLLOWS:
LINE 1 - ORSCHELN P/N
LINE 2 - BAR CODE (ORSCHELN P/N)
LINE 3 - SERIAL NUMBER
LINE 4 - BAR CODE (SERIAL #), MFG DATE, ORSCHELN NAME

EXAMPLE:

NOTES:

PEDAL TO MEET CUMMINS 2007 ENGINE REQUIREMENTS AS DEFINED IN CUMMINS ENGINEERING STANDARD 14616 AND AEB1567, SECTION 5.

DESCRIPTION	LOWER	UPPER	UNIT
SUPPLY VOLTAGE	4.50	5.50	VREF
IDLE VOLTAGE TS1	19.00	100.00	% OF VREF
IDLE VOLTAGE TS2	8.00	100.00	% OF VREF
WOT VOLTAGE TS1	0.00	87.00	% OF VREF
WOT VOLTAGE TS2	0.00	45.00	% OF VREF
PEDAL ANGLE	16.00	20.00	DEGREES
TS1 SPAN	57.00	100.00	% OF VREF
TS2 SPAN	26.00	100.00	% OF VREF
TS1 SMOOTHNESS	0.00	0.50	% OF OUTPUT SPAN OVER ANY 2% OF TRAVEL
TS2 SMOOTHNESS	0.00	0.50	% OF OUTPUT SPAN OVER ANY 2% OF TRAVEL
CORRELATION	-2.00	2.00	% OF VREF

2. ELECTRICAL CONNECTOR [6 PIN] DELPHI / PACKARD

SUGGESTED MATING PARTS:
CONNECTOR 12066317
TERMINAL 12110236 OR EQUIVALENT.

(3) TORQUE SENSOR SCREWS (82252700) TO 23±5 IN·LBS
APPLY TAMPERPROOF COMPOUND

SENSOR PIN LAYOUT	
PIN	FUNCTION
A	APS1 - SIGNAL
B	APS1 - RETURN / GROUND
C	APS1 - SUPPLY
D	APS2 - SUPPLY
E	APS2 - RETURN / GROUND
F	APS2 - SIGNAL

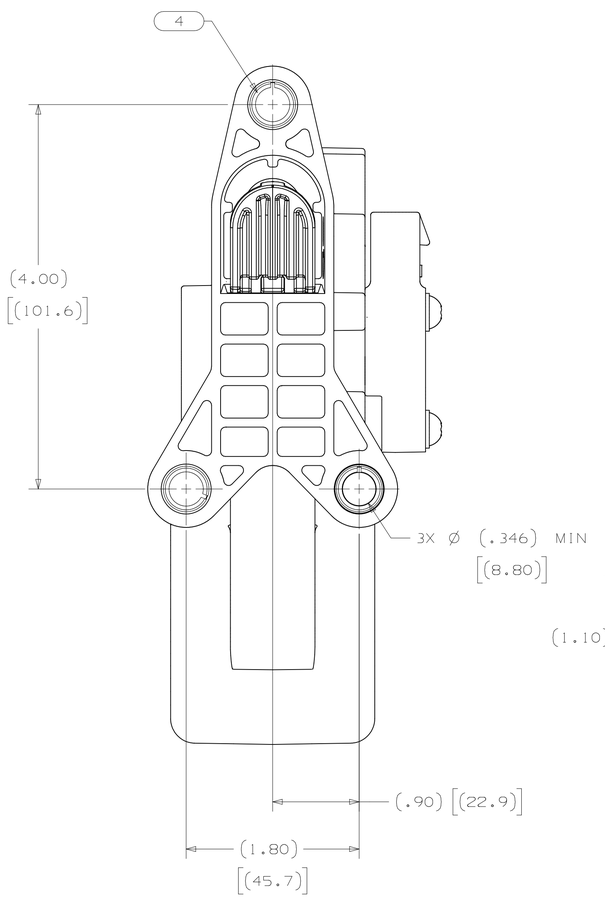

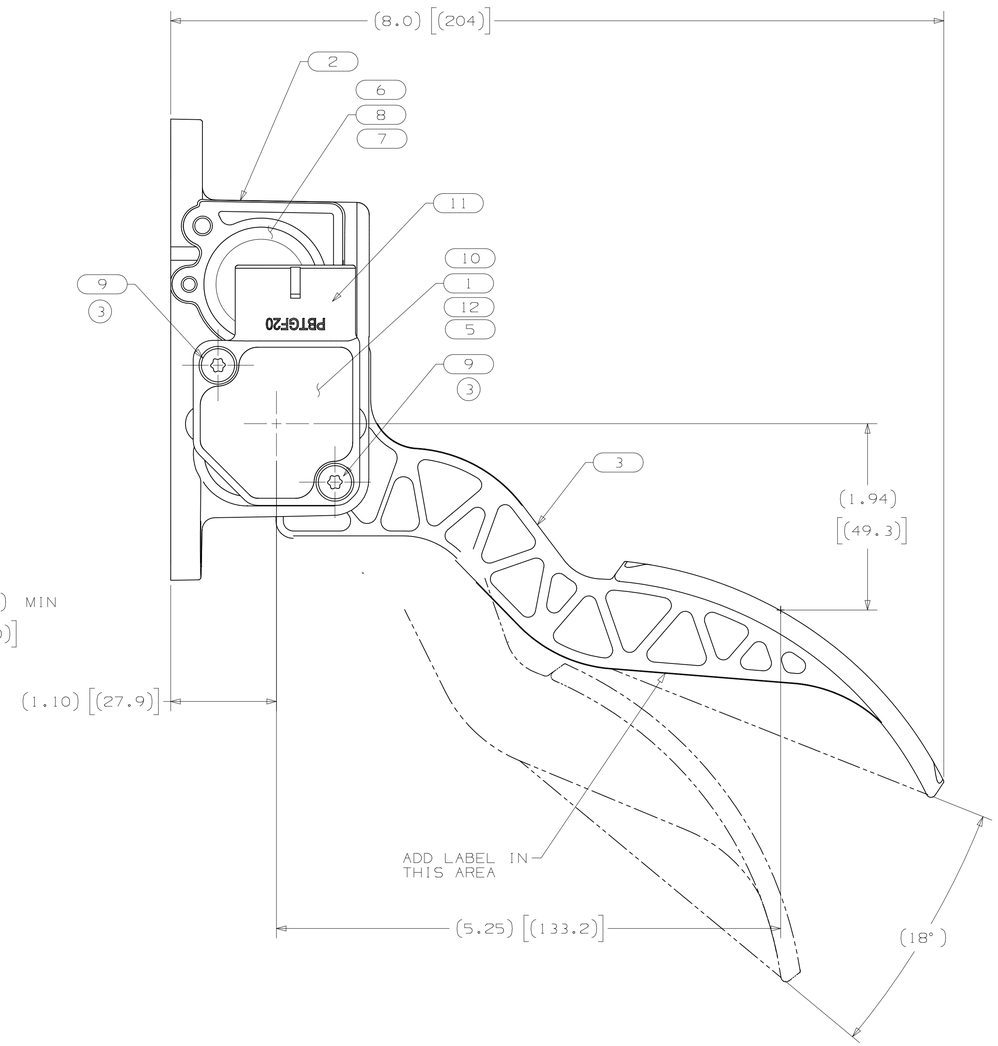

ECN	DATE	REV	REVISION	DR	CK
			UDTD DWG STRUCTURE	RT	SB
16985	020312	C	82280400 PEDAL ARM WAS 82249400		
15411	031411	B	ADD 4-8010 TO PARTS LIST	RT	SB
15092	121710	A	82284900 REATINING RING WAS 82249600	RT	SB
13719	031210	-	ORIGINATED DRAWING, WAS 61219800	JA	AC

MATERIAL: ---

TREATMENT/FINISH: ---

MOBERLY, MO
CAGE CODE: 92867

DO NOT SCALE
THIRD ANGLE PROJECTION

UNLESS OTHERWISE SPECIFIED
SCALE: NTS
ANG ± 2°
.XX ± .03
.XXX ± .015

DR A.CHAPMAN | CHK T.MOYER | DATE 051109

NAME
SUSPENDED PEDAL ASSEMBLY (CUMMINS 07)

PART NO. EFP139-00

ORSCHELN

PROPRIETARY NOTICE: DO NOT COPY
THIS DOCUMENT AND ALL DATA CONTAINED HEREIN ARE PROPRIETARY TO ORSCHELN INTELLIGENT DRIVE SYSTEMS. THE INFORMATION IS CONFIDENTIAL AND IS DISCLOSED UNDER THE LAWS OF THE UNITED STATES AND MUST BE KEPT SECRET BY THE RECEIVING PARTY. 2) NOT PROVIDED TO ANY THIRD PARTY AND 3) USED ONLY FOR APPROVED PURPOSES.